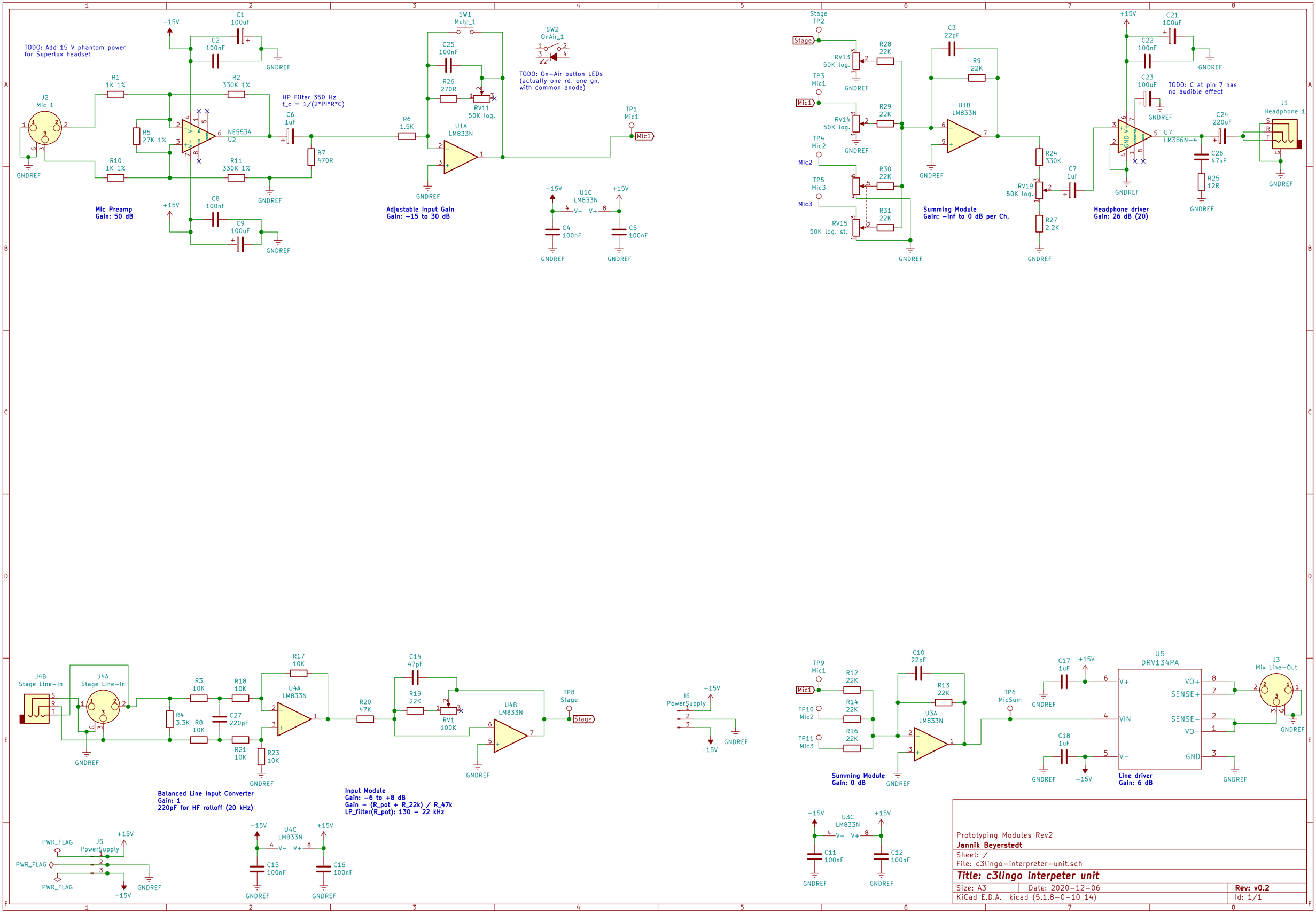
TODO: Add 15 V phantom power for Superlux headset
J2 Mic 1
R1 1K 1%
R10 1K 1%
R5 27K 1%
R2 330K 1%
R11 330K 1%
NE5534 U2
C1 100uF
C2 100nF
C8 100nF
C9 100uF
−15V
+15V
GNDREF
HP Filter 350 Hz
f_c = 1/(2*PI*R*C)
C6 1uF
R7 470R
Mic Preamp
Gain: 50 dB
R6 1.5K
SW1 Mute_1
C25 100nF
R26 270R
RV11 50K log.
U1A LM833N
Adjustable Input Gain
Gain: −15 to 30 dB
SW2 OnAir_1
TODO: On−Air button LEDs (actually one rd, one gn, with common anode)
TP1 Mic1
U1C LM833N
C4 100nF
C5 100nF
Stage TP2
TP3 Mic1
TP4 Mic2
TP5 Mic3
RV13 50K log.
RV14 50K log.
RV15 50K log. st.
R28 22K
R29 22K
R30 22K
R31 22K
C3 22pF
R9 22K
U1B LM833N
Summing Module
Gain: −Inf to 0 dB per Ch.
R24 330K
RV19 50K log.
R27 2.2K
C7 1uF
C21 100uF
C22 100nF
C23 100uF
TODO: C at pin 7 has no audible effect
U7 LM386N−4
C24 220uF
C26 47nF
R25 12R
J1 Headphone 1
Headphone driver
Gain: 26 dB (20)
J4B Stage Line−In
J4A Stage Line−In
R4 3.3K
R3 10K
R8 10K
R18 10K
R21 10K
C27 220pF
R17 10K
R23 10K
U4A LM833N
Balanced Line Input Converter
Gain: 1
220pF for HF rolloff (20 kHz)
R20 47K
C14 47pF
R19 22K
RV1 100K
U4B LM833N
TP8 Stage
Input Module
Gain: −6 to +8 dB
Gain = (R_pot + R_22k) / R_47k
LP_filter(R_pot): 130 − 22 kHz
J6 PowerSupply
J5 PowerSupply
PWR_FLAG
U4C LM833N
C15 100nF
C16 100nF
TP9 Mic1
TP10 Mic2
TP11 Mic3
R12 22K
R14 22K
R16 22K
C10 22pF
R13 22K
U3A LM833N
Summing Module
Gain: 0 dB
TP6 MicSum
C17 1uF
C18 1uF
U5 DRV134PA
VO+
SENSE+
SENSE−
VO−
V+
VIN
V−
GND
Line driver
Gain: 6 dB
J3 Mix Line−Out
U3C LM833N
C11 100nF
C12 100nF
Prototyping Modules Rev2
Jannik Beyerstedt
Sheet: /
File: c3lingo−interpreter−unit.sch
Title: c3lingo interpeter unit
Size: A3
Date: 2020−12−06
Rev: v0.2
KiCad E.D.A. kicad (5.1.8−0−10_14)
Id: 1/1